(Embedded System Lab)

EXPERIMENT NO: 04

Aim: Interfacing of Ultrasonic sensor with Arduino Uno.

Apparatus: Arduino Uno, Ultrasonic sensor, Proteus software, Arduino IDE and Computer.

Theory: An ultrasonic sensor is an instrument that measures the distance to an object using ultrasonic sound waves. An ultrasonic sensor uses a transducer to send and receive ultrasonic pulses that relay back information about an object's proximity. High-frequency sound waves reflect from boundaries to produce distinct echo patterns.

How does an Ultrasonic Distance Sensor work?

The ultrasonic sensor (or transducer) works on the same principles as a radar system. An ultrasonic sensor can **convert electrical energy into acoustic waves and vice versa.** The acoustic wave signal is an ultrasonic wave traveling at a frequency above 18kHz The HC-SR04 ultrasonic sensor **generates ultrasonic waves at 40kHz frequency**, which is **much higher** than the **audible range of human hearing** The generated ultrasonic waves travel in the air to the target and reflect back to the ultrasonic sensor Typically, a microcontroller like Arduino is used for communication with an ultrasonic sensor **To measure the distance to an object**, the **microcontroller sends** a **trigger signal to** the **ultrasonic sensor.**

The **duty cycle** of this **trigger signal is 10µS** for the HC-SR04 ultrasonic sensor. When triggered, the **ultrasonic sensor generates eight acoustic (ultrasonic) wave** bursts and initiates a time counter The transmitted sound wave travels in the air and reaches the target object. The sound waves are reflected back to the ultrasonic sensor's receiver part. **As soon as the reflected (echo) signal is received,** the timer stops The output of the **ultrasonic sensor is a high pulse with the same duration as the time difference between transmitted ultrasonic bursts and the received echo signal.**

trig pin (trigger)= the transmitter (trig pin) **sends a sound wave**. The **object picks** the **wave** up, **reflecting it back to the sensor.**

echo pin = The receiver (echo pin) picks it up.

Vcc= 5v

GND= Ground

Circuit Diagram:

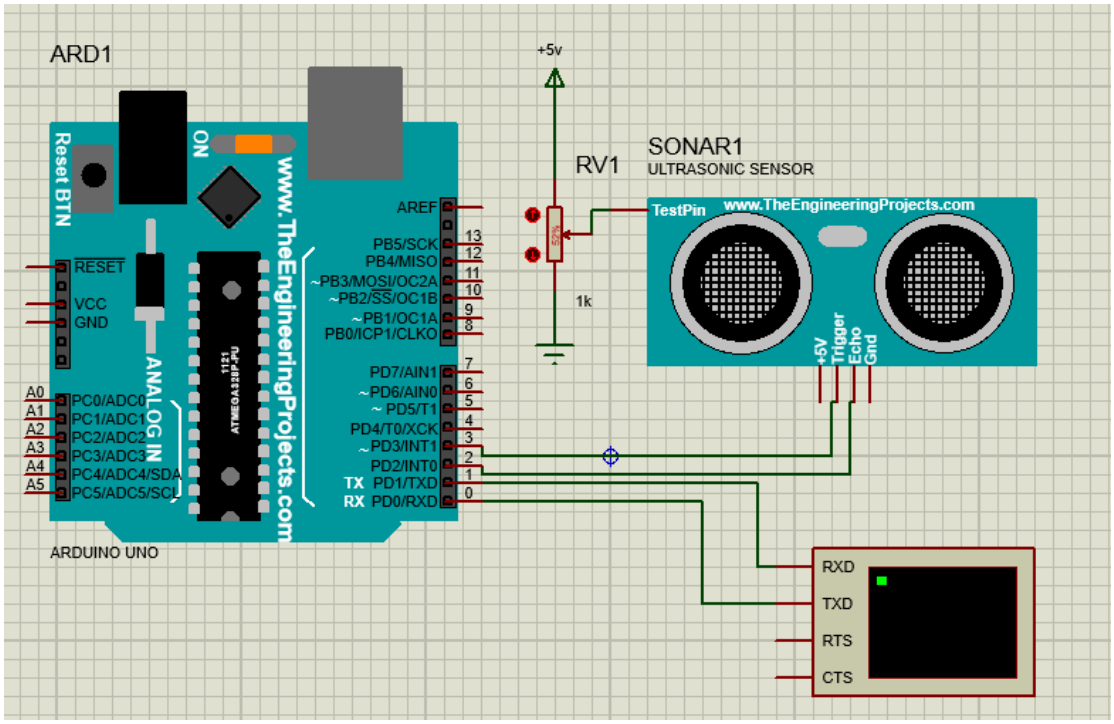

Program:

```
int echoPin = 2;        // Echo Pin of Ultrasonic Sensor
int pingPin = 3;        // Trigger Pin of Ultrasonic Sensor

void setup() {
  Serial.begin(9600);                // Starting Serial Communication
  pinMode(pingPin, OUTPUT);   // Initializing pin 3 as output
  pinMode(echoPin, INPUT);      // Initializing pin 2 as input
}
void loop() {
  long duration, cm;
   digitalWrite(pingPin, LOW);
  delayMicroseconds(2);

  digitalWrite(pingPin, HIGH);
  delayMicroseconds(10);

  digitalWrite(pingPin, LOW);

  duration = pulseIn(echoPin, HIGH);       // Using pulseIn function to determine total
                                                time

   cm = duration / 29 / 2;       // Convert microseconds to centimeters
                                  //duration represents the time taken for the ultrasonic
                                      pulse to travel to the object and back.
                                 //29 value is a approximation speed of sound in
                                      centimeters per microsecond.
                                // 2 accounts for the round trip (transmit and Receive).
  Serial.print(cm);
  Serial.print("cm");
  Serial.println();

  delay(100);
}
```

Output after Execution:

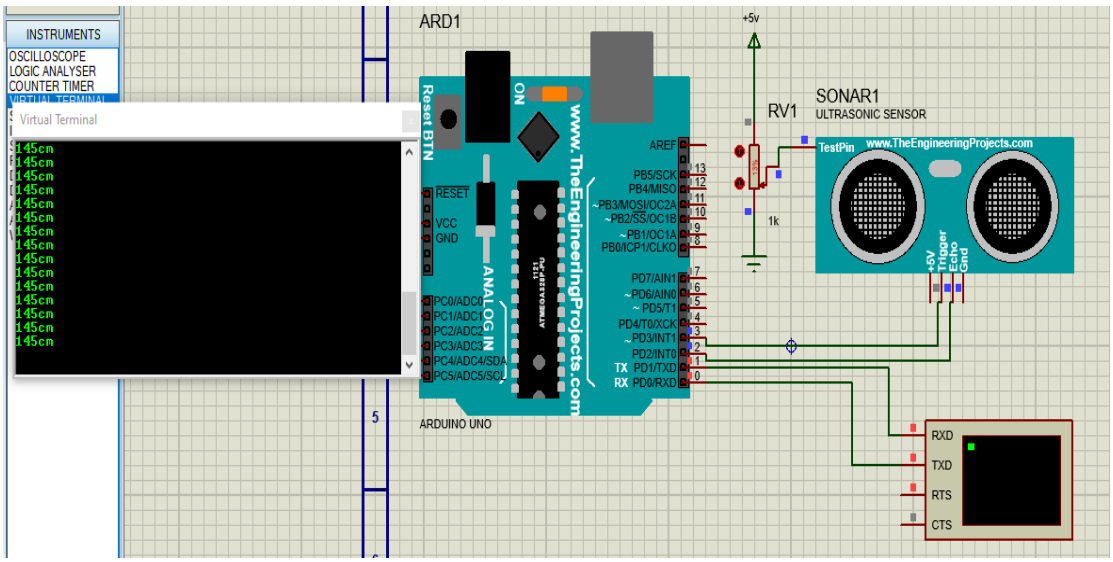

Conclusion: In conclusion, interfacing an ultrasonic sensor with an Arduino Uno provides a versatile and efficient means of accurately measuring distances and integrating this functionality into various projects and applications.